EE-SX1105

Photomicrosensor (Transmissive)

■ Dimensions

Note: All units are in millimeters unless otherwise indicated.

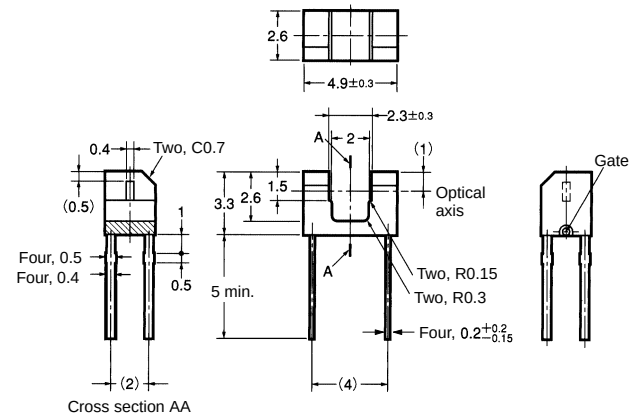

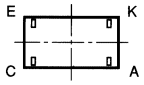

Internal Circuit

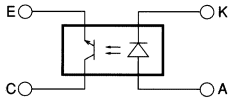

Terminal No.	Name
A	Anode
K	Cathode
C	Collector
E	Emitter

Unless otherwise specified, the tolerances are ±0.2 mm.

■ Features

- Ultra-compact with a sensor width of 4.9 mm and a slot width of 2 mm.
- Low-height of 3.3 mm.
- PCB mounting type.
- High resolution with a 0.4-mm-wide aperture.

■ Absolute Maximum Ratings (Ta = 25°C)

Item		Symbol	Rated value
Emitter	**Forward current**	I_F	50 mA (see note 1)
	Pulse forward current	I_{FP}	---
	Reverse voltage	V_R	5 V
Detector	**Collector–Emitter voltage**	V_{CEO}	30 V
	Emitter–Collector voltage	V_{ECO}	4.5 V
	Collector current	I_C	30 mA
	Collector dissipation	P_C	80 mW (see note 1)
Ambient temperature	**Operating**	Topr	–25°C to 85°C
	Storage	Tstg	–30°C to 85°C
Soldering temperature		Tsol	260°C (see note 2)

Note: 1. Refer to the temperature rating chart if the ambient temperature exceeds 25°C.
2. Complete soldering within 3 seconds.

■ Electrical and Optical Characteristics (Ta = 25°C)

Item		Symbol	Value	Condition
Emitter	**Forward voltage**	V_F	1.3 V typ., 1.6 V max.	I_F = 50 mA
	Reverse current	I_R	10 µA max.	V_R = 5 V
	Peak emission wavelength	λ_P	950 nm typ.	I_F = 50 mA
Detector	**Light current**	I_L	0.2 mA min.	I_F = 20 mA, V_{CE} = 5 V
	Dark current	I_D	500 nA max.	V_{CE} = 10 V, 0 ℓx
	Leakage current	I_{LEAK}	---	---
	Collector–Emitter saturated voltage	V_{CE} (sat)	0.4 V max.	I_F = 20 mA, I_L = 0.1 mA
	Peak spectral sensitivity wavelength	λ_P	800 nm typ.	V_{CE} = 5 V
Rising time		tr	10 µs typ.	V_{CC} = 5 V, R_L = 100 Ω, I_F = 20 mA
Falling time		tf	10 µs typ.	V_{CC} = 5 V, R_L = 100 Ω, I_F = 20 mA